MITSUBISHI ELECTRIC

HVAC Advanced Products Division

ENERGY STAR

Mr. SLIM® Split Zoning A/C and Heat Pumps

SUBMITTAL DATA: MSZ-GE18NA & MUZ-GE18NA

18,000 BTU/H WALL-MOUNTED HEAT-PUMP SYSTEMS

Job Name: Location: Date:

Purchaser: Engineer:

Submitted to: For ☐ Reference ☐ Approval ☐ Construction

System Designation: Schedule No.:

GENERAL FEATURES

- Wall-mounted indoor unit
- Standard Hybrid Catechin Prefilter is included with indoor unit
- Quiet operation
- Choice of fan speeds: Quiet, Low, Medium, High, and Super High; Auto fan speed control also included
- Wireless remote controller is included; PAR-21MAA wired remote controller can be installed as an option
- Indoor unit powered from outdoor unit using A-Control
- Auto restart following a power outage
- Base heater is available as an option
- Limited warranty: five years on parts and defects and seven years on the compressor

OPTIONAL ACCESSORIES

Outdoor Unit

- Base Heater (MAC-641BH-U)
- Drain Socket Assembly (MAC-811DS)

Indoor Unit

- M-NET Control Adapter (MAC-399IF)
- MA Contact Terminal Interface (MAC-397IF)
- Wired Remote Controller (PAR-21MAA; requires MAC-397IF)
- Condensate Pump (230V; SI3100-230)
- Anti-allergy Enzyme Filter (Two pieces per set; MAC-408FT-E)

Cooling*

Rated Capacity . . . . . 17,200 Btu/h
Minimum Capacity . . . . . 3,700 Btu/h
SEER . . . . . 19.2 Btu/h/W
Total Input . . . . . 1,640 W

Heating at 47°F*

Rated Capacity . . . . . 21,600 Btu/h
Minimum Capacity . . . . . 3,500 Btu/h
HSPF . . . . . 10.0 Btu/h/W
Total Input . . . . . 1,900 W

Heating at 17°F*

Rated Capacity . . . . . 13,400 Btu/h
Rated Total Input . . . . . 1,450 W
Maximum Capacity . . . . . 17,200 Btu/h
Maximum Total Input . . . . . 2,080 W

* Rating Conditions (Cooling) - Indoor: 80ºF (27ºC) DB, 67ºF (19ºC) WB; Outdoor: 95ºF (35ºC) DB, 75ºF (24ºC) WB.
(Heating at 47ºF) - Indoor: 70ºF (21ºC) DB, 60ºF (16ºC) WB; Outdoor: 47ºF (8ºC) DB, 43ºF (6ºC) WB.
(Heating at 17ºF) - Indoor: 70ºF (21ºC) DB, 60ºF (16ºC) WB; Outdoor: 17ºF (-8ºC) DB, 15ºF (-9ºC) WB.

Electrical Requirements

Power Supply . . . . . 208 / 230V, 1-Phase, 60 Hz
Breaker Size . . . . . 15 A

Voltage

Indoor - Outdoor S1-S2 . . . . . AC 208 / 230V
Indoor - Outdoor S2-S3 . . . . . DC 12-24V
Indoor - Remote Controller . . . . . Wireless

OPERATING RANGE

		Indoor Intake Air Temp.	Outdoor Intake Air Temp.
Cooling	Maximum	90°F (32°C) DB, 73°F (23°C) WB	115°F (46°C) DB
	Minimum	67°F (19°C) DB, 57°F (14°C) WB	14°F (-10°C) DB
Heating	Maximum	80°F (27°C) DB, 67°F (19°C) WB	75°F (24°C) DB, 65°F (18°C) WB
	Minimum	70°F (21°C) DB, 60°F (16°C) WB	-4°F (-20°C) DB, -5°F (-21°C) WB

Indoor Unit: MSZ-GE18NA

Wireless Remote Controller

Outdoor Unit: MUZ-GE18NA

Indoor Unit

MCA . . . . . 1 A
Fan Motor . . . . . 0.76 F.L.A.
Airflow (Quiet - Lo - Med - Hi - Super Hi)
Cooling . . . . . 230 - 275 - 339 - 420 - 533 Dry CFM
194 - 240 - 304 - 385 - 498 Wet CFM
Heating . . . . . 230 - 275 - 339 - 431 - 512 Dry CFM

Sound Pressure Level (Quiet - Lo - Med - Hi - Super Hi)
Cooling . . . . . 28 - 33 - 38 - 44 - 49 dB(A)
Heating . . . . . 28 - 33 - 38 - 43 - 48 dB(A)

DIMENSIONS	UNIT INCHES / MM
W	31-7/16 / 799
D	9-1/8 / 232
H	11-5/8 / 295

Weight . . . . . 22 lbs. / 10 kg
External Finish . . . . . Munsell No. 1.0Y 9.2 / 0.2
Field Drainpipe Size O.D. . . . . 5/8" / 15.88 mm
Remote Controller . . . . . Wireless
(Optional Wired Remote Controller PAR-21MAA; see Data Submittal Sheet)

Outdoor Unit

Compressor . . . . . DC Inverter-driven Twin Rotary
MCA . . . . . 14 A
Fan Motor . . . . . 0.93 F.L.A.
Sound Pressure Level
Cooling . . . . . 54 dB(A)
Heating . . . . . 56 dB(A)

DIMENSIONS	INCHES / MM
W	33-1/16 / 840
D	13 / 330
H	33-7/16 / 849

Weight . . . . . 119 lbs. / 54 kg
External Finish . . . . . Munsell No. 3Y 7.8 / 1.1

Refrigerant Type R410A
Refrigerant Pipe Size O.D.
Gas Side . . . . . 1/2" / 12.7 mm
Liquid Side . . . . . 1/4" / 6.35 mm
Max. Refrigerant Pipe Length . . . . . 100 ft. / 30 m
Max. Refrigerant Pipe Height Difference . . . . . 50 ft. / 15 m
Connection Method . . . . . Flared

R410A INVERTER

DIMENSIONS: MSZ-GE18NA & MUZ-GE18NA

MSZ-GE18NA

Unit: inch

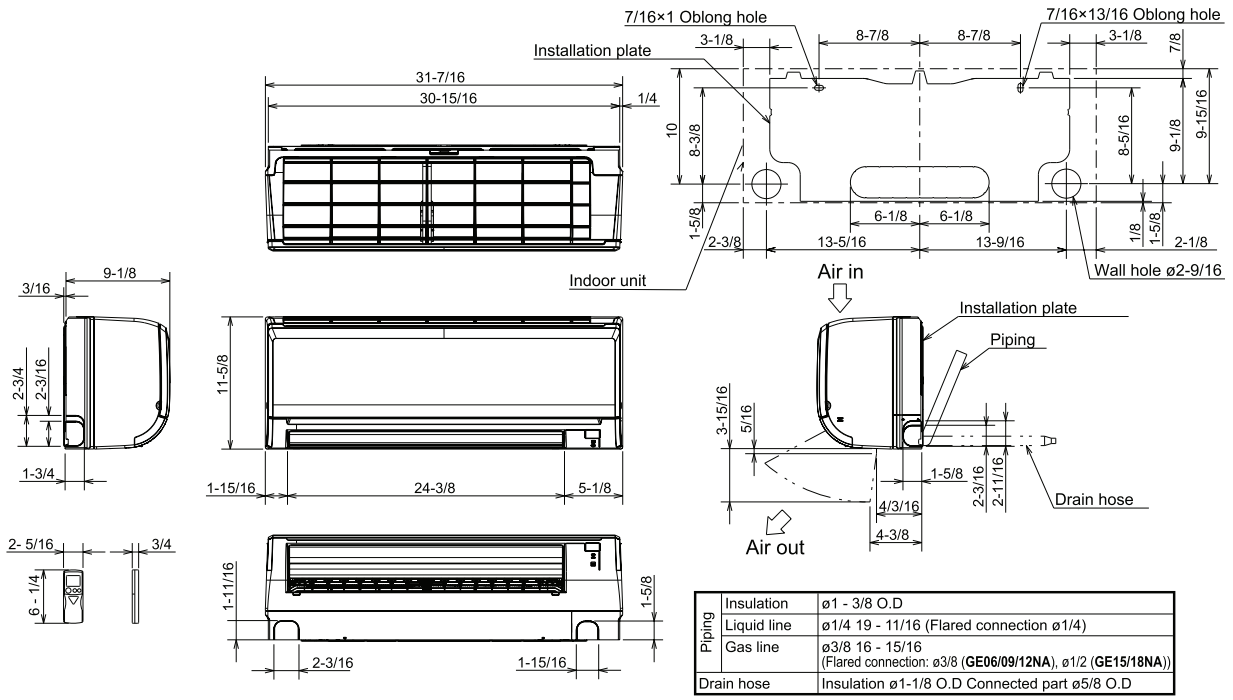

Piping	Insulation	ø1 - 3/8 O.D
	Liquid line	ø1/4 19 - 11/16 (Flared connection ø1/4)
	Gas line	ø3/8 16 - 15/16 (Flared connection: ø3/8 (**GE06/09/12NA**), ø1/2 (**GE15/18NA**))
Drain hose		Insulation ø1-1/8 O.D Connected part ø5/8 O.D

MUZ-GE18NA

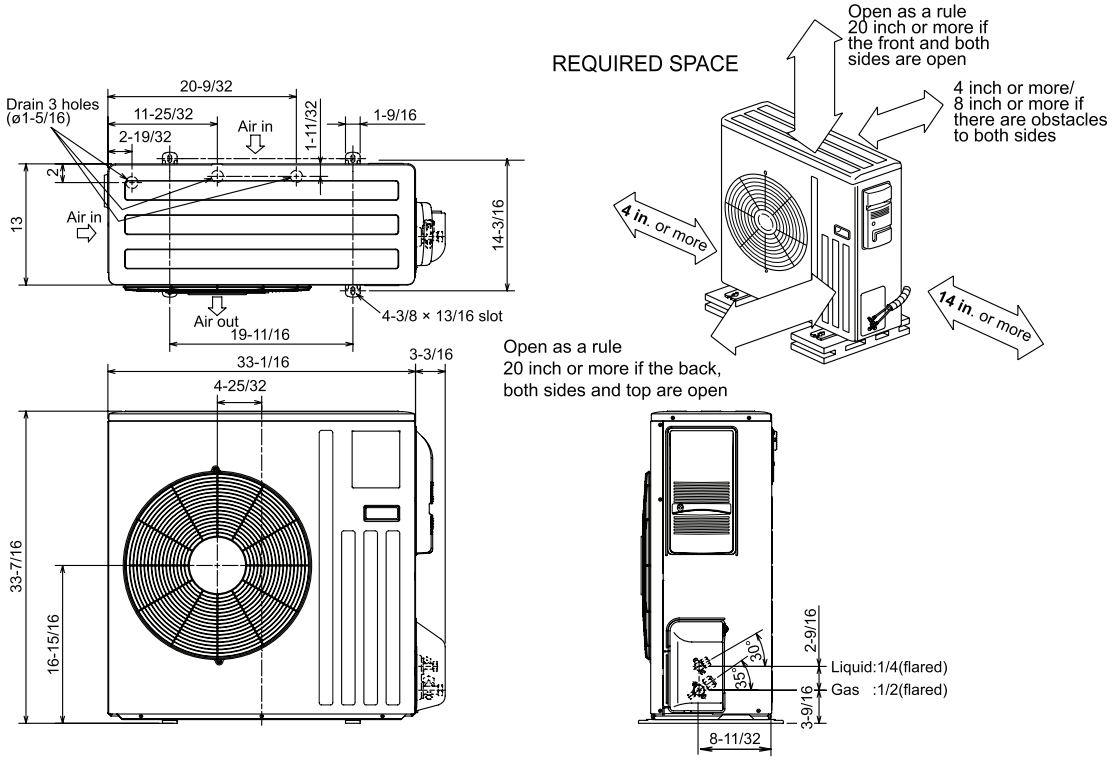

HVAC Advanced Products Division
3400 Lawrenceville Suwanee Rd
Suwanee, GA 30024
Tele: 678-376-2900 • Fax: 800-889-9904
Toll Free: 800-433-4822 (#3)
www.mehvac.com

Specifications are subject to change without notice.

C SD - MSZ-GE18NA & MUZ-GE18NA - 200909 © MITSUBISHI ELECTRIC / HVAC 2009